SALES DRAWING SALES DRAWING

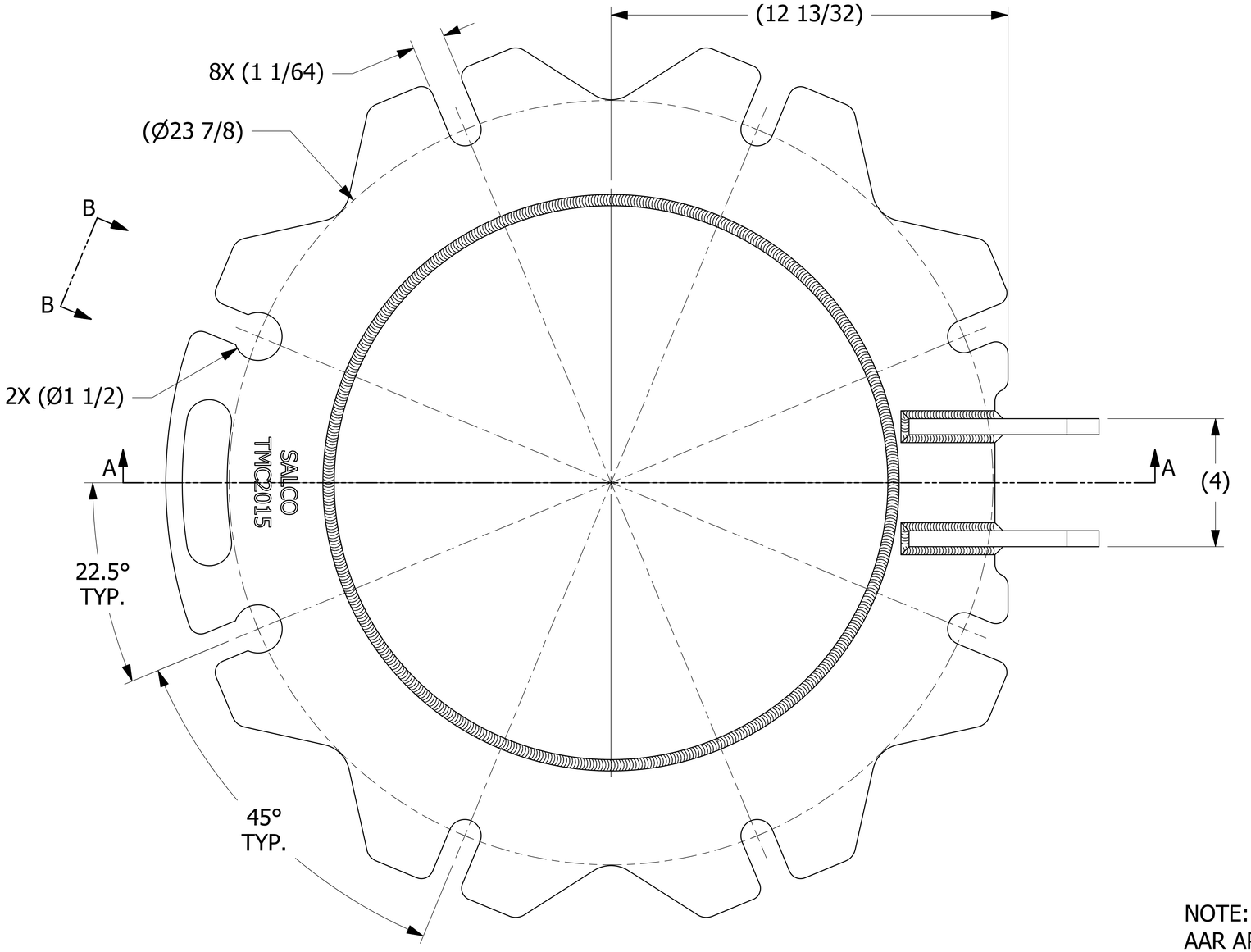

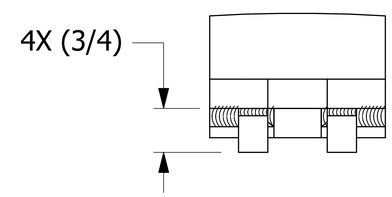

VIEW B-B
SCALE 1 : 1

NOTE:
AAR APPROVAL # E-182113.

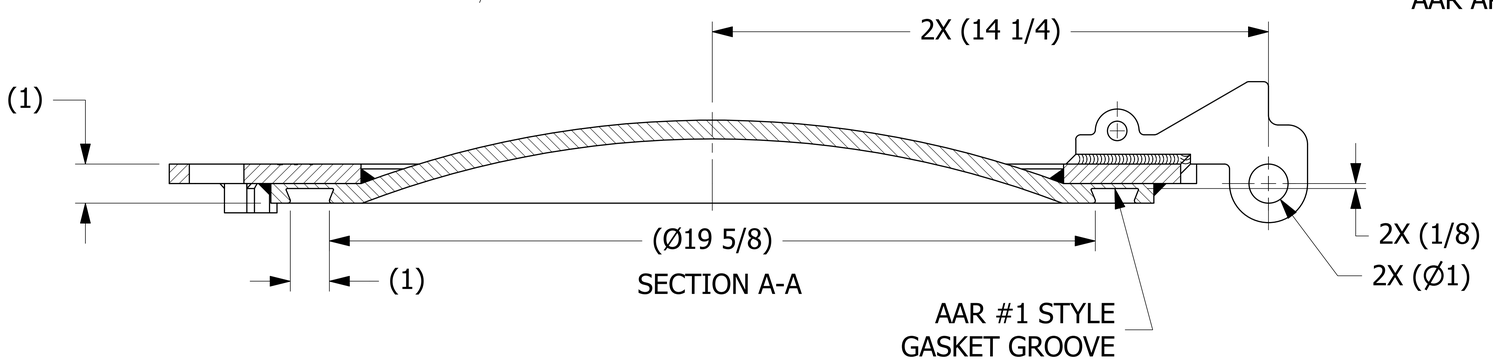

SECTION A-A

REV	BY	DATE	DESCRIPTION
F	WEB	5-16-19	REMOVED QAP4A-1 NOTE; Q-2.15.7 WAS QAP4C-1; D-008 WAS DSS 12; ADDED D-005 NOTE; AAR # WAS E-089005
E	RJP	11-16-17	HINGE WELD WAS 3/8"; ADDED NOTE 6; ADDED "SALCO" TO ENGRAVING
D	RJP	4-26-17	TMCDR2015 WAS TMCR201C1 & TMCDSC1MF; A44194 WAS A29293; 2X (Ø1 1/2) WAS 2X Ø1.50; 4.00 +.00/-.06 WAS 4.00; REMOVED 4X .69, (12 1/16), & QAP5A-1; ADDED 4X .55, (12 13/32), & LOT CONTROL; UPDATED WELD NOTE
C	JG	9-16-15	REPLACED TMCHS4TR W/ B40713
B	JG	4-6-15	UPDATED GEOMETRY ON TMCR201C1
A	WEB	3-27-14	RELEASED FOR PRODUCTION

UNLESS OTHERWISE SPECIFIED
DIMENSIONAL TOLERANCES
FRACTIONAL: ±1/16
X.XX: ±.03
X.XXX: ±.015
ANGULAR: ±1°
DEBURR ALL SHARP EDGES.
ALL MACHINED SURFACES TO HAVE A 125 RMS FINISH UNLESS NOTED OTHERWISE.
THIRD ANGLE PROJECTION

DRAWN BY:	JJK
CHECKED BY:	CHL
PROTOTYPE BY:	JJK
PROTOTYPE DATE:	1/31/2014
APPROVED FOR PRODUCTION BY:	WEB
PRODUCTION DATE:	3/27/2014

SALCO PRODUCTS, INC.

PART NAME: MANWAY COVER 20" 8-BOLT

MATERIAL: CARBON STEEL

PROJECT #: 130620 | SHEET #: 1 OF 1 | SCALE: 2:3

DRAWING #: E23750 | PART #: TMC2015

THIS PRINT, PROPERTY OF SALCO PRODUCTS INC, CONTAINS PROPRIETARY INFORMATION AND MUST NOT BE COPIED, REPRODUCED, OR USED DETRIMENTALLY TO OUR INTEREST.

SALES DRAWING SALES DRAWING